Current part is item (16) on diagram. Available at www.oshkoshequipment.com

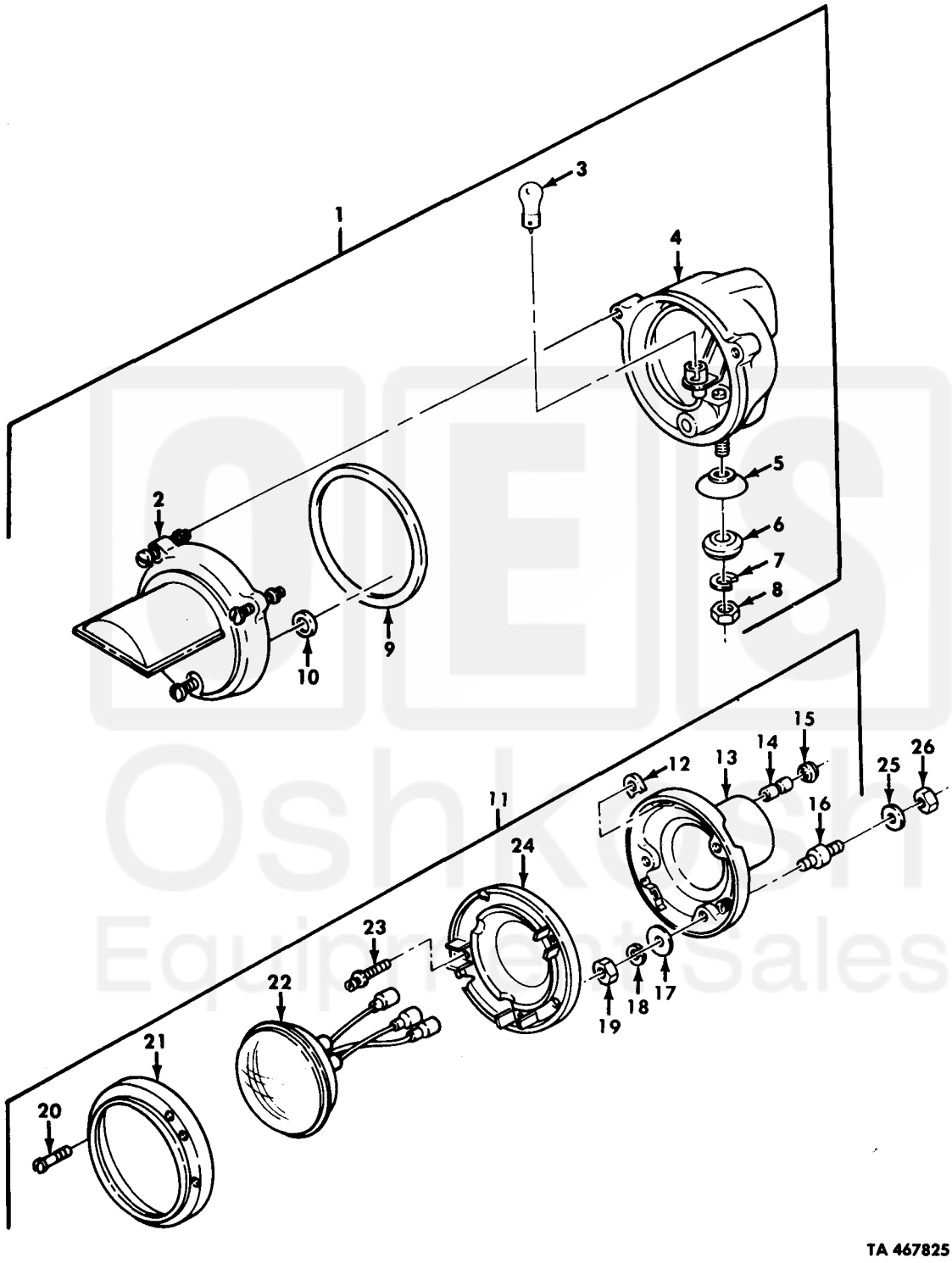

Figure 89. Blackout Lamp and Headlight.

Current part is item (16) on diagram. Available at www.oshkoshequipment.com

Current part is item (16) on diagram. Available at www.oshkoshequipment.com

(1) ILLUS. (a) FIG. NO.	(b) ITEM NO.	(2) SMR CODE	(3) NATIONAL STOCK NUMBER	(4) PART NUMBER	(5) FSCM	(6) DESCRIPTION USABLE ON CODE	(7) U/M	(8) QTY INC IN UNIT
						GROUP 0609 LIGHTS FIG.89 BLACKOUT LAMP AND HEADLIGHT		
89	1	PAOOO	6220-01-094-1440	DC8225-1	34904	HEADLIGHT,BLACKOUT	EA	1
89	2	PAOZZ	6220-01-107-2613	DC8218	34904	RIM,HEADLIGHT	EA	1
89	3	PAOZZ	6240-00-044-6914	MS35478-1683	96906	LAMP,INCANDESCENT	EA	1
89	4	PAOZZ	6220-01-128-0087	DC8217	34904	HOUSING ASSEMBLY,LAMP	EA	1
89	5	PAOZZ	5310-01-100-2067	11668979	19207	WASHER,LOCK	EA	1
89	6	PAOZZ	5310-00-350-2655	5294507	19207	WASHER,FINISHING	EA	1
89	7	PAOZZ	5310-00-637-9541	MS35338-46	96906	WASHER,LOCK	EA	1
89	8	PAOZZ	5310-00-732-0558	MS51967-8	96906	NUT,PLAIN,HEXAGON	EA	1
89	9	PAOZZ	5330-01-037-0663	DC8211	34904	GASKET	EA	1
89	10	PAOZZ	5330-01-076-6172	DC8226	34904	GASKET	EA	1
89	11	PAOOO	6220-00-678-9045	8741462	19207	HEADLIGHT	EA	2
89	12	PAOZZ	5310-00-241-6921	8741435	19207	NUT,BLANK	EA	2
89	13	PAOZZ	6220-00-443-0589	8741461	19207	HOUSING,HEADLAMP	EA	1
89	14	PAOZZ	5935-00-807-4109	8741492	19207	ADAPTER,CONNECTOR	EA	3
89	15	PAOZZ	5325-00-088-6147	8741442	19207	GROMMET,NONMETALLIC	EA	3
89	16	PAOZZ	5340-00-182-3726	8741441	19207	MOUNT,RESILIENT	EA	3
89	17	PAOZZ	5310-00-463-0268	5310615	19207	WASHER,FLAT	EA	3
89	18	PAOZZ	5310-00-582-5965	MS35338-44	96906	WASHER,LOCK	EA	3
89	19	PAOZZ	5310-00-768-0319	MS51968-2	96906	NUT,PLAIN,HEXAGON	EA	3
89	20	PAOZZ	5305-00-832-5743	8741437	19207	SCREW	EA	3
89	21	PAOZZ	5365-00-832-5650	8741446	19207	RING,RETAINING	EA	1
89	22	PAOZZ	6240-00-966-3831	8741491	19207	LAMP,INCANDESCENT	EA	1
89	23	PAOZZ	5305-00-353-0969	7538146	19207	SCREW	EA	2
89	24	PAOZZ	6220-00-998-6142	8741447	19207	RING,ASSEMBLY MOUNT	EA	1
89	25	PAOZZ	5310-00-582-5965	MS35338-44	96906	WASHER,LOCK	EA	6
89	26	PAOZZ	5310-00-768-0319	MS51968-2	96906	NUT,PLAIN,HEXAGON	EA	6
						END OF FIGURE		

Current part is item (16) on diagram. Available at www.oshkoshequipment.com